Rec 2/14/17

3

MTSU Clean Energy Initiative Project Funding Request

There are five (5) sections of the request to complete before submitting.

1.General Information	
Name of Person Submitting Request : Forrest Higginbotham	
Department/Office Building Services	Phone # (Office) 898-5537
MTSU Box # 32	Phone # (Cell)
E-mail: forrest.higginbotham@mtsu.edu	Submittal Date: 02/14/17

2. Project Categories (Select One)			
Select the category that best describes the project.			
	Energy Conservation/Efficiency	X	Sustainable Design
	Alternative Fuels		Other
	Renewable Energy		

3. Project Information
a. Please provide a brief descriptive title for the project. b. The project cost estimate is the expected cost of the project to be considered by the committee for approval, which may differ from the total project cost in the case of matching funding opportunities. Any funding request is a 'not-to-exceed' amount. Any proposed expenditure above the requested amount will require a resubmission. c. List the source of project cost estimates.
3a. Project Title: Walker Library Women's Hand Dryers
3b. Project Cost Estimate: $2,281.81
3c. Source of Estimate: Equipment manufacturer and RSMeans estimating data.

4. Project Description

(Completed in as much detail as possible.)

a. The scope of the work to be accomplished is a detailed description of project activities.
b. The benefit statement describes the advantages of the project as relates to the selected project category.
c. The location of the project includes the name of the building, department, and/or specific location of where the project will be conducted on campus.
d. List any departments you anticipate to be involved. Were any departments consulted in preparation of this request? Who? A listing may be attached to this form when submitted.
e. Provide information for anticipated future operating and/or maintenance requirements occurring as a result of the proposed project.
f. Provide any additional comments or information that may be pertinent to approval of the project funding request.

4a. Scope: Work to be accomplished:

This project is to install (2) hand dryers in the 2nd floor Women's restroom in Walker Library.

4b. Scope: Benefit Statement

The benefit of this project includes a reduction of landfill waste compared to using paper towels. The use of the proposed hand dryer costs 69% less to operate than other hand dryers while being the most hygienic with a HEPA filter standard from the manufacturer.

4. Project Description (continued)
4c. Location of Project (Building, etc.) Fairview Building Men and Women's hallway restrooms.
4d. Participants and Roles Building Services personnel to purchase and install.
4e. Future Operating and/or Maintenance Requirement
4f. Additional Comments or Information Pertinent to the Proposed Project: By removing paper towels out of the location will also reduce the opportunity for individuals to improperly dispose of paper towels with the toilet.

5. Project Performance Information
Provide information if applicable. a. Provide information on estimated annual energy savings stated in units such as kW, kWh, Btu, gallons, etc. b. Provide information on estimated annual energy cost savings in monetary terms. c. Provide information on any annual operating or other cost savings in monetary terms. Be specific. d. Provide information about any matching or supplementary funding opportunities that are available. Identify all sources and explain.
5a. Estimated Annual Energy Savings (Estimated in kW, kWh, Btu, etc.)
5b. Annual Energy COST Savings ($).
5c. Annual Operating or Other Cost Savings. Specify. ($ In addition, by installing hand dryers the cost savings versus purchasing paper towels and installation totals approximately $5,805.81. The return on investment (ROI) equals 4.72 months.
5d.Matching or Supplementary Funding (Identify and Explain). Unknown.

dyson airblade V

HU 02

LOW VOLTAGE AND HIGH VOLTAGE TECHNICAL SPECIFICATION

Electrical

Input voltage: Low voltage = 110-127 V, High voltage = 200-240 V

Frequency: 50 or 60 Hz, subject to voltage (85-115 V at 50 Hz); (85-130 V at 60 Hz); (200-240 V at 50 & 60 Hz)

Standby power consumption: Less then 0.5 W

Motor specification: 1,000 W digital brushless motor

Motor switching rate: 5,000 per second

Amp: Recommended dedicated 15 amp circuit. (110V ~10A; 120V ~8.33A; 220V ~4.55A; 240V ~4.17A)

Heater type: None

Construction

Fascia: Polycarbonate

Antibacterial coating type:
HU02 (Sprayed Nickel) contains antibacterial additive in paint.
HU02 (White) contains antibacterial moulded additive.
Can help prevent the growth of bacteria.

Back plate mounting bracket: ABS/PBT Plastic

Exterior screw type: Anti-tamper 4 mm Pin-Hex

Water ingress protection to IP24

Filter

HEPA filter (Glass fiber and fleece prelayer)

Removes 99.97% of bacteria as small as 0.3 microns

Operation

Touch free capacitive sensor activation

Hand dry time measurement: 12 seconds
(Measurement based on NSF Protocol P.335)

Sound power level: 79 dB(A)

Sound pressure level @ 2 m: 63 dB(A)[1]

Operation lock-out period: 30 seconds

Airspeed at aperture: 675 km/h / 420 mph

Maximum altitude: 2,000 metres / 6,561 ft.

Operating airflow: up to 5.28 gal/sec & up to 42.38 CFM

Operating temperature range: 0°C-40°C / 32°F-104°F

Logistics

Single unit order code:
Sprayed Nickel - Low voltage: 307174-01, High voltage: 307172-01
White - Low voltage: 307173-01, High voltage: 307171-01

Unit barcodes:
Sprayed Nickel - Low voltage: 885609009933, High voltage: 885609009797
White - Low voltage: 885609009896, High voltage: 885609009179

Net weight: 2.9 kg / 6.17 lbs

Packaged weight: 4.0 kg / 8.81 lbs

Packaged dimensions:
(H) 146 mm × (W) 454 mm × (D) 273 mm / (H) 5 3/4" × (W) 17 7/8" × (D) 10 3/4"

Standard warranty

5 year parts and 5 year limited labor warranty

Accreditations:

Carbon Trust

NSF International

Quiet Mark

Contributes to LEED certification

ADA compliant

UL Listed

[1]Sound pressure measured at 2 m distance, in a semi-anechoic chamber.

Product range (Select one)

HU02 Sprayed Nickel	HU02 White
Part number/SKU	**Part number/SKU**
Low Voltage: 307174-01	Low Voltage: 307173-01
High Voltage: 307172-01	High Voltage: 307171-01

The Carbon label is a trademark of the Carbon Trust. The NSF logo is the registered trademark of NSF International. Quiet Mark is a registered trademark of the Noise Abatement Society.

For further information, please contact Dyson: 1-855-720-6169, www.dyson.com/airblade

dyson airblade V

TECHNICAL SPECIFICATION

HU
02

REAR ELEVATION

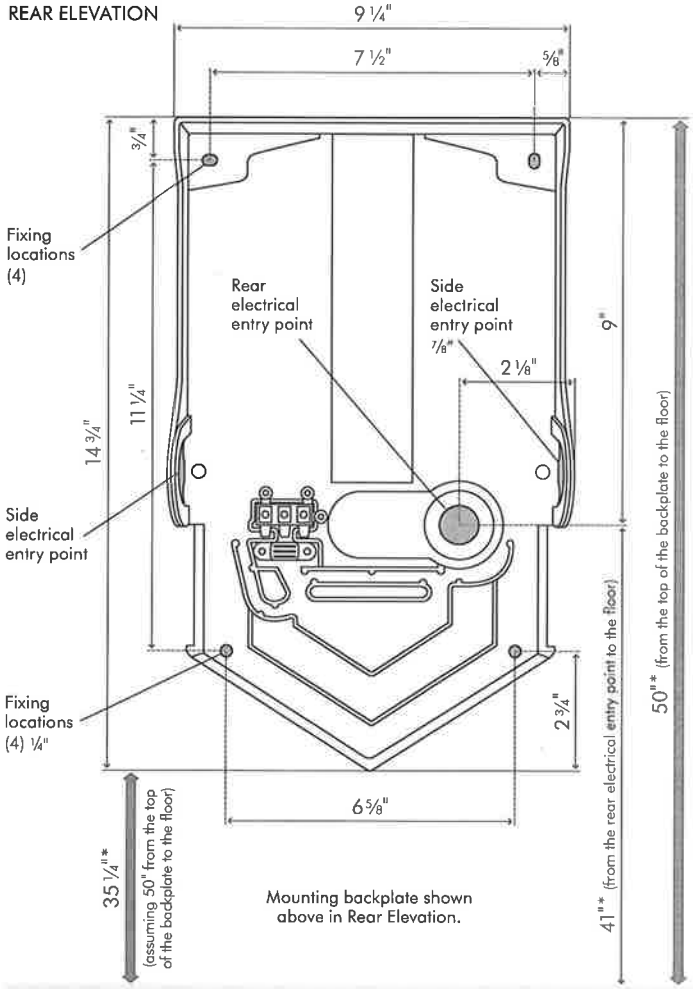

SIDE ELEVATION

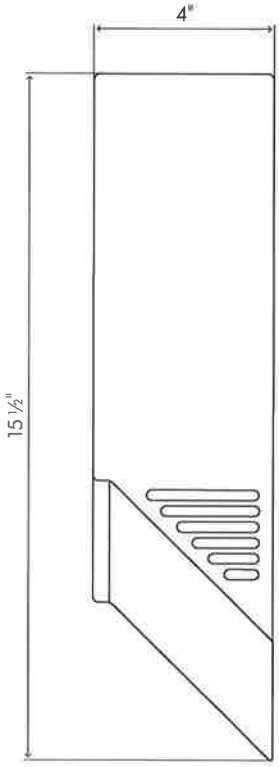

Machine fascia shown above in Side Elevation.

All dimensions shown in inches (+/– 3/16 inch).

Holes indicated in green are measured to the center of the hole.

Machine dimensions
Height 15½" Width 9 7/32" Depth 4"
Minimum clearance
8 11/16" clearance either side and 1 3/16" above machine.

*Please look into local guidelines for ADA compliance.

For further information, please contact Dyson: 1-855-720-6169, www.dyson.com/airblade